MODEL
DLDF

2-way, solenoid-operated directional spool valve (740 Series)
SERIES 1 / CAPACITY: 45 L/min. / CAVITY: T-13A

sunhydraulics.com/model/DLDF

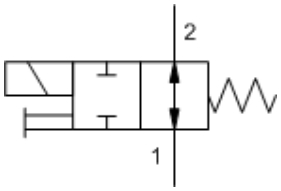

M-Control, H-Spool

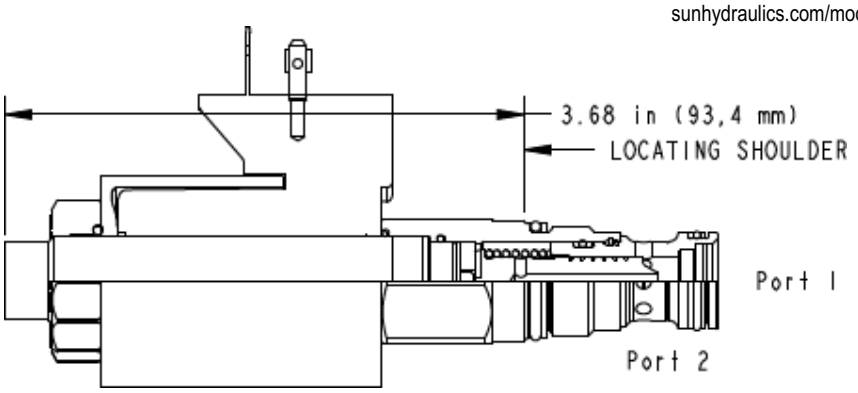

CONFIGURATION

M	Control	Manual Override
H	Spool Configuration	Normally Open
N	Seal Material	Buna-N
224	Coil	DIN 43650-Form A, 24 VDC

This solenoid-operated 2-way, 2-position cartridge is a direct-acting, balanced spool directional valve. The valve is available in either a normally open or normally closed configuration and is designed to be used with 740 and 747 Series coils.

TECHNICAL DATA

NOTE: DATA MAY VARY BY CONFIGURATION. SEE CONFIGURATION SECTION.

Maximum Operating Pressure	350 bar
Maximum Valve Leakage at 110 SUS (24 cSt)	80 cc/min.@210 bar
Manual Override Force Requirement	33 N/100 bar @ Port 1
Manual Override Stroke	2,5 mm
Response Time - Typical	50 ms
Switching Frequency	15,000 max. cycles/hr
Seal kit - Cartridge	Buna: 990413007
Seal kit - Cartridge	Viton: 990413006

NOTES

Please verify cartridge clearance requirements when choosing a Sun manifold. Different valve controls and coils require different clearances.

CONFIGURATION OPTIONS

Model Code Example: DLDFMHN224

CONTROL	(M)	SPOOL CONFIGURATION	(H)	SEAL MATERIAL	(N)	COIL *	(224)
M Manual Override		**H** Normally Open		**N** Buna-N		**224** DIN 43650-Form A, 24 VDC	
D Twist/Lock (Dual) Manual Override		**C** Normally Closed		**E** EPDM		No coil	
L Twist/Lock (Detent) Manual Override				**V** Viton			
T Twist (Momentary) Manual Override							
X No Manual Override							

* Additional coil options are available

© 2024 Sun Hydraulics

CONFIGURATION

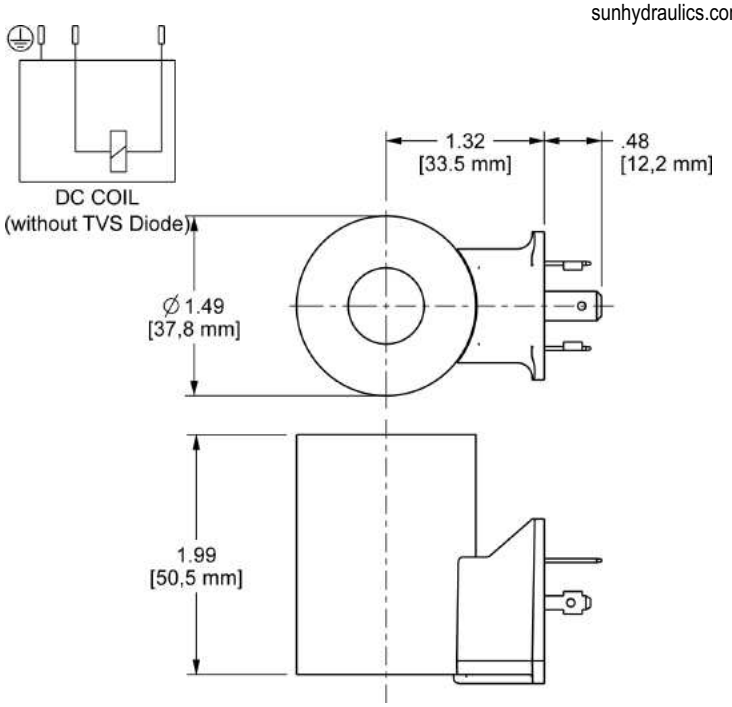

TECHNICAL DATA

Operating Temperature Range	-40 to 110 °C
Arc Suppression (TVS)	None
Power Consumption (cold) - at rated voltage	25 Watts
Maximum Ambient Temperature	50 °C
Voltage/Frequency	24 VDC
Operating Voltage Range	+10%/-15%
Duty Cycle Rating	100 %
Connector	ISO4400 - EN/DIN175301-803, Form A (ISO/DIN 43650) 3-pin
Coil Nut Torque	0,5 Nm

USED WITH

DBAF	DBAFS	DFBF	DFBG	DFCI	DFCJ	DFDI	DFDJ	DFEI	DFEJ
DFFI	DFFJ	DLDF	DLDFS	DMBF	DNBF	DTAF	DTAFS	DTBF	DTCF
DTDF	DTDFS	DWBF	DWDF	FDEP	FMDF	FMDG	FPBF	FPBG	FPBI
FPBJ	FPBU	FREP	PRDF	PRDG	RPEI	RVCK	RVCL	RVCM	RVCN
991711300	991711600	991712300	991712600	991713030	991713060	991740001	XMD-01	XMD-02	

© 2024 Sun Hydraulics